WTCI-540-LERA

BCG-5

540-L

DOCUMENT DATA FORM **Your Name:** HSL 540-L

Document Title or Description (max. 254 characters): Circle: Same as cover (or fill in below)

Exterior wall column, connection Details (Drawing Book 4)

Include work order no. and floor no. if applicable

Roll # (e.g., CORR-4):	Doc. ID (report #, dwg. #):	
BGC-15		
Document Date:	**Document Author Name:**	**Author Organization:**
1967		SHCR

KEYWORDS - HIGHLIGHT ALL THAT APPLY

Level 1

Bankers Trust	Project 6	WTC 4 - South Plaza Bldg.
Concourse	Project 7	WTC 5 - North Plaza Bldg.
Electrical Substation	Project 8	WTC 6 - Customs House
Liberty Plaza	WFC 1 - Oppenhiemer Dow	WTC 7
PATH Station	WFC 2 - Tower B	WTC Complex
Project 1	WFC 3 - American Express	WTC Plaza
Project 2	WFC 4 - Tower D	
Project 3	(WTC 1) - North Tower	Add
Project 4	(WTC 2) - South Tower	
Project 5	WTC 3 - Marriot Hotel	

Level 2

Accident analysis & risk	Mech./elec.	Add
Architectural	News coverage	
Data request	Police	
Emergency management	Security	
Evacuation	(Structural)	
Fire protection	Tenant alterations	
Fire service		

Level 3

1993 explosion	Deck	Human comfort	Splices
A/E fitout	Deflection	HVAC	Sprinkler
A-242	Demolition	Index	Stability
A-36	Design	Inspection	Stairways
A-497	Doors	Insulation	Standards
Air cooled condensers	Drawings	Joist	(Steel)
Analysis	Eastern States Steel	L-50	Steel composition
Angles	Egress	Loads	Stiffness
Antenna	Elevator	Maintenance	Structural review
Artifacts	Emergency communications	Marking	Survivor
Asbestos	Equipment	Mesh reinforcement	Tenant list
Beams	Escalator	Model	Testing
Bow tie	(Exterior columns)	Mullion	Tie
Bracing	Fabrication	Operations	Triad
Bridging truss	Family member	Paint	Truss
Calculations	Fire alarms	Partition layout	Vestibule
Carpet	Fireproofing	Photos	Vibration
Ceilings	Fire spread	Pipes	(Walls)
Chillers	Flammability	Plumbing	Water supply
Cladding	Floor	Probability, uncertainty	Weather
Collapse	Floor load	Reinforcing (strengthening)	Weight
Columns	Floor slab	Renovation	Weld size
Communication systems	Floor system	Repair	Wind
Composite truss	Floor trusses	Safety	Windows
Computer output	Foundations	Security system	Yield strength
Computer program	Frame	Shear knuckle	
Concrete	Frame analysis	Shear test	Add
(Connections)	Frequency	Shop drawings	
Construction	Fuel	Shortening	
Contract	Furniture layout	Slurry wall	
Core beams	Generators	Smoke control	
Core columns	Guidelines	Smoke test	
Dampers	Gypsum board	Spandrel beam	
Debris	Hat truss	Specifications	

WORTHINGTON, SKILLING, HELLE & JACKSON — Civil & Structural Engineers — WTCI-540-LERA

PROJECT: THE WORLD TRADE CETER | TITLE: EXTERIOR WALL -107 to 110 - NOTES & INDEX | DATE: 4-12-67

REVISIONS

11-7-67
Printed 1-3-69
2-3-69
3-3-69
4-1-69
Printed 5-1-69
8-15-69
12-15-69
8-5-70 R

NOTES

1. See Key Plan, this sheet for locations of wall elevations. All wall elevations are viewed from the inside looking outward.
2. All wide flange column material & columns Type A&B shall be Fy42 unless otherwise noted.
3. Structural steel tubing shall be seamless and shall conform to ASTM A501.
4. All other material, including detail material, shall be Fy36 unless otherwise noted.
5. All welding shall be accomplished using E70XX low hydrogen electrodes or other equivalent approved welding process.
6. All bolts shall be Friction Type A325 unless otherwise noted.
7. All bolts are furnished by others except shipping bolts.

TOWER A — TOWER B

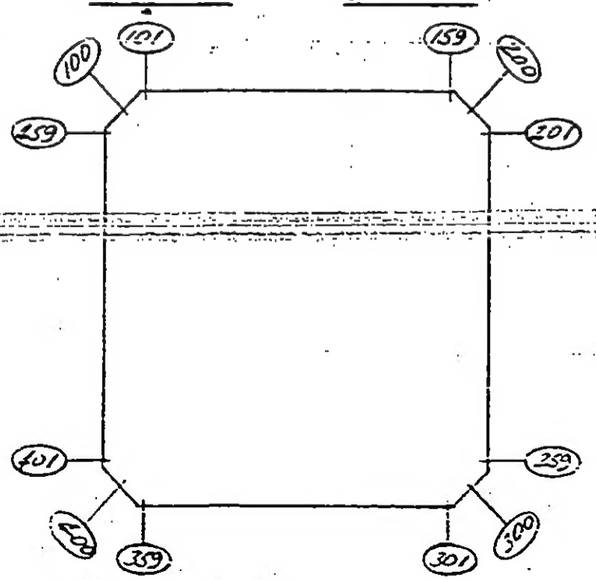

KEY PLAN

INDEX

4-AB3-1 Notes & Index
4-A3-2.1 Column & Spandrel Sched. - Tower A
2.2
2.3
2.4
4-B3-2.1 Column & Spandrel Sched - Tower B
2.2
2.3
2.4
4-AB3-3 Spandrel Splices
4-AB3-4 Typical Sections
4-AB3-5.1 Column Details
4-AB3-5.2 Column Types
4-AB3-6 Spandrel Types
4-AB3-7.1 Connections Floor 108
4-AB3-7.2 Connections Floor 108
4-AB3-7.3 Connections Floor 108
4-AB3-8.1 Connections Floor 110
4-AB3-8.2 Connections Floor 110
4-AB3-9 Corner Details
4-AB3-10 Tube Details
4-AB3-11 Exterior Wall Splice Detail - Floor 107

LESLIE E. ROBERTSON — No. 24788 — REGISTERED PROFESSIONAL ENGINEER — STATE OF NEW YORK

4-AB3-1

SKILLING HELLE CHRISTIANSEN ROBERTSON — Structural & Civil Engineers

PROJECT: THE WORLD TRADE CENTER

TITLE: EXT. WALL - 107 TO 110 - COL & SPANDREL SCH - TOWER A

DATE: 8-15-69

REVISIONS
10-23-69
12-15-69
Conn Hbs added
2-26-70
3-16-70

Spandrel splice 1 typical

Spandrel splice 2 typical at type 2 spandrels

Fl. 110

Fl. 108

Fl. 107

17'-6"

For column types see 4-AB3-5.2

For spandrel types see 4-AB3-6 and 9

For column connection details see 4-AB3-7.1.7.2.8

58 spaces @ 3'-4" = 193'-4"

Fl. 110

Fl. 108

SKILLING HELLE CHRISTIANSEN ROBERTSON — Structural & Civil Engineers

PROJECT: THE WORLD TRADE CENTER

TITLE: EXT WALL-107 TO 110 - COL & SPANDREL SCH - TOWER A

DATE: 8-15-69

REVISIONS
10-23-69
12-15-69
Conn dtls added
2-26-70
3-16-70

Spandrel splice 1 typical

Spandrel splice 2
typical of type C spandrels

Typ @ wf unless otherwise noted
58 spaces @ 3'-4" = 193'-4"

Typ @ tube unless otherwise noted

For column types see 4-A83-3.2

For spandrel types see 4-A83-6 and 9

A.110
A.108
A.107
A.108
A.110

SKILLING, HELLE, CHRISTIANSEN, ROBERTSON — Structural & Civil Engineers

PROJECT: THE WORLD TRADE CENTER | TITLE: EXT. WALL - 107 TO 110 - COL & SPANDREL SCH - TOWER A | DATE: 8-15-69

REVISIONS
10-23-69
12-15-69 Conn. dtls added
2-26-70
3-16-70

Spandrel splice 1 typical

Spandrel splice 2 typical of type C spandrels

42 42 42 — for column types see 4-A83-5.2

For spandrel types see 4-A83-6 and 9

43 43 44 43 43 — For column connection details see 4-A83-7.1, 7.2, 8

58 spaces @ 3'-4" = 193'-4"

SKILLING, HELLE, CHRISTIANSEN, ROBERTSON — Structural & Civil Engineers

PROJECT: THE WORLD TRADE CENTER

TITLE: EXT WALL - 107 TO 110 - COL & SPANDREL SCH - TOWER A

DATE: 8-15-69

REVISIONS:
10-23-69
12-15-69
Conn Hls added
2-26-70
3-16-70

401 403 405 407 409 411 413 415 417 419 421 423 425 427 429 431 433 435

A.110

Spandrel splice 1 typical

Spandrel splice 2 typical of type C spandrels

A.107

40 Type C unless otherwise noted 58 spaces @ 3'-4" = 193'-4"

41 Type C tabe unless otherwise noted.

42 43 44 43 42 for column types see 4-A83-5.2

42 43 43 43 43 43 42 for spandrel types see 4-A83-6 and 9

433 435 437 439 441 443 445 447 449 451 453 455 457 459 101

A.110

A.108

SKILLING, HELLE, CHRISTIANSEN, ROBERTSON — Structural & Civil Engineers

PROJECT: THE WORLD TRADE CENTER | TITLE: EXT WALL - 107 TO 110 - COL & SPANDREL SCH - TOWER B | DATE: 9-2-69

REVISIONS

10-23-69
12-15-69
Conn dtls added
2-26-70
3-16-70
8-3-70

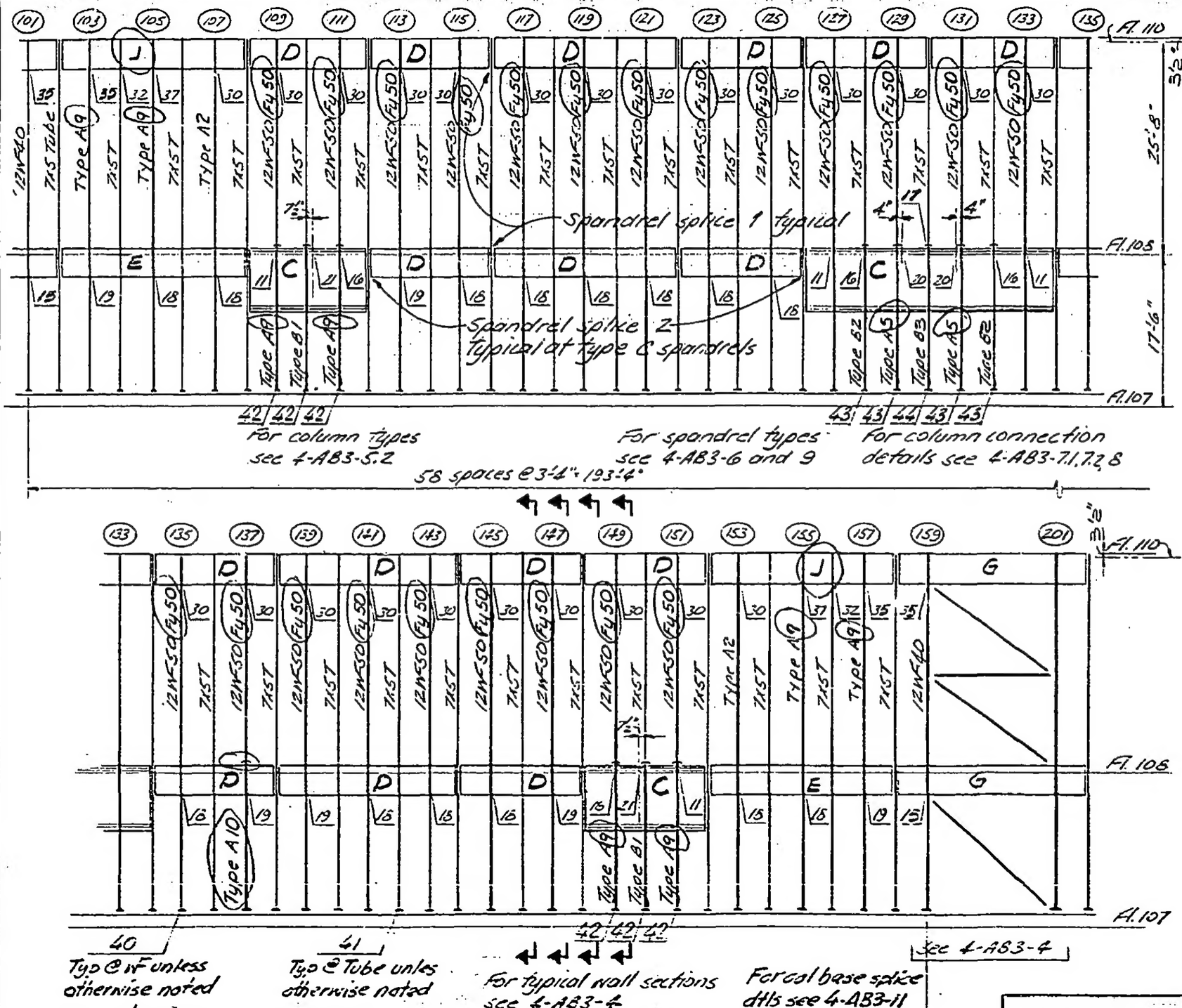

DESIGNED J.H.
DRAWN J.A.
REVIEWED

SKILLING, HELLE, CHRISTIANSEN, ROBERTSON — Structural & Civil Engineers

PROJECT: THE WORLD TRADE CENTER | TITLE: EXT WALL - 107 TO 110 - COL & SPANDREL SCH - TOWER B | DATE: 9-2-69

REVISIONS

10-23-69

12-15-69
Conn d+6 added

2-26-70

3-16-70

8-3-70

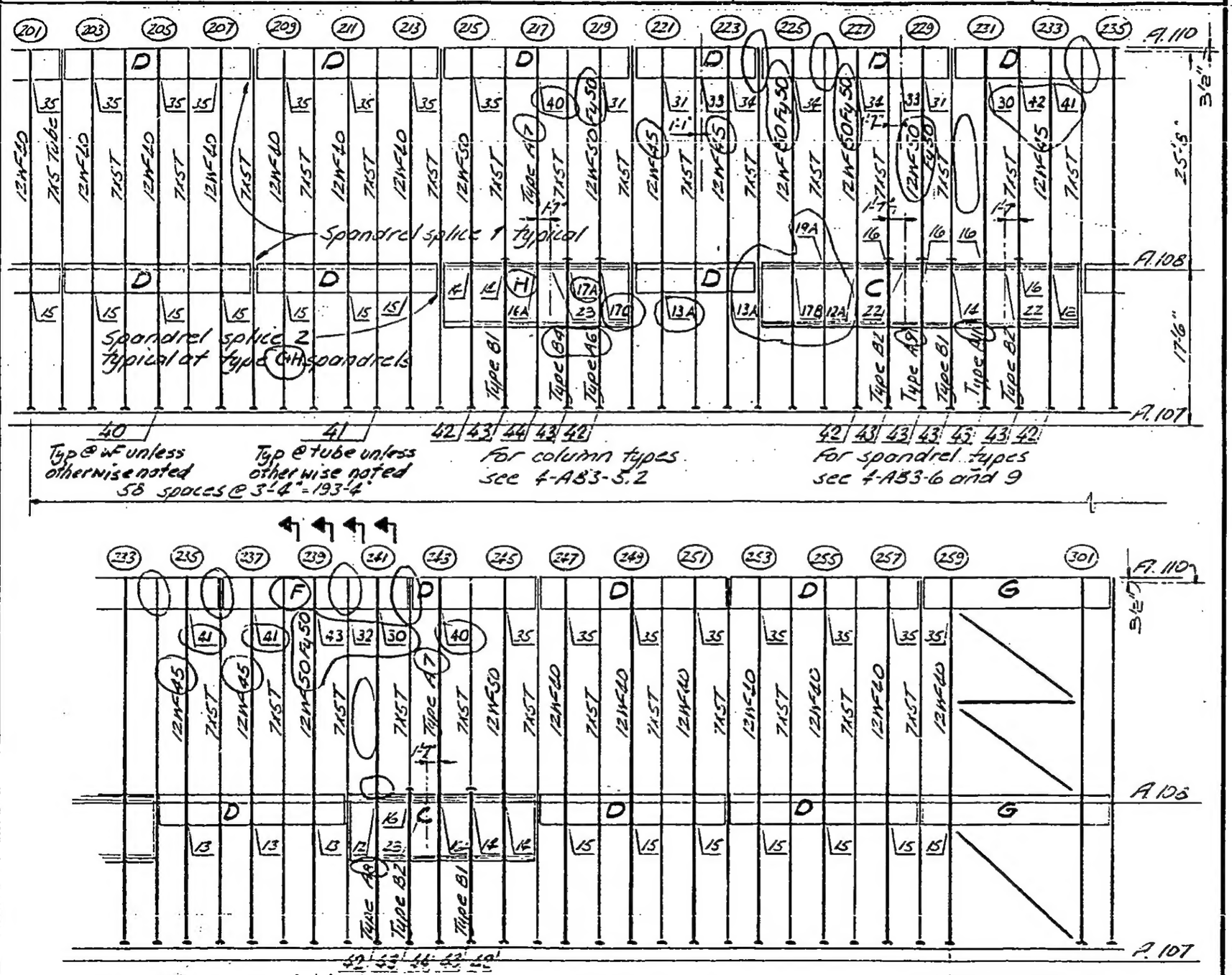

DESIGNED J.H.

DRAWN J.A.

REVIEWED

SKILLING, HELLE, CHRISTIANSEN, ROBERTSON — Structural & Civil Engineers

PROJECT: THE WORLD TRADE CENTER | TITLE: EXT WALL - 107 TO 110 - COL & SPANDREL SCH - TOWER B | DATE: 9-2-69

REVISIONS
10-23-69
12-15-69
Conn dtls added
2-26-70
3-16-70
8-3-70

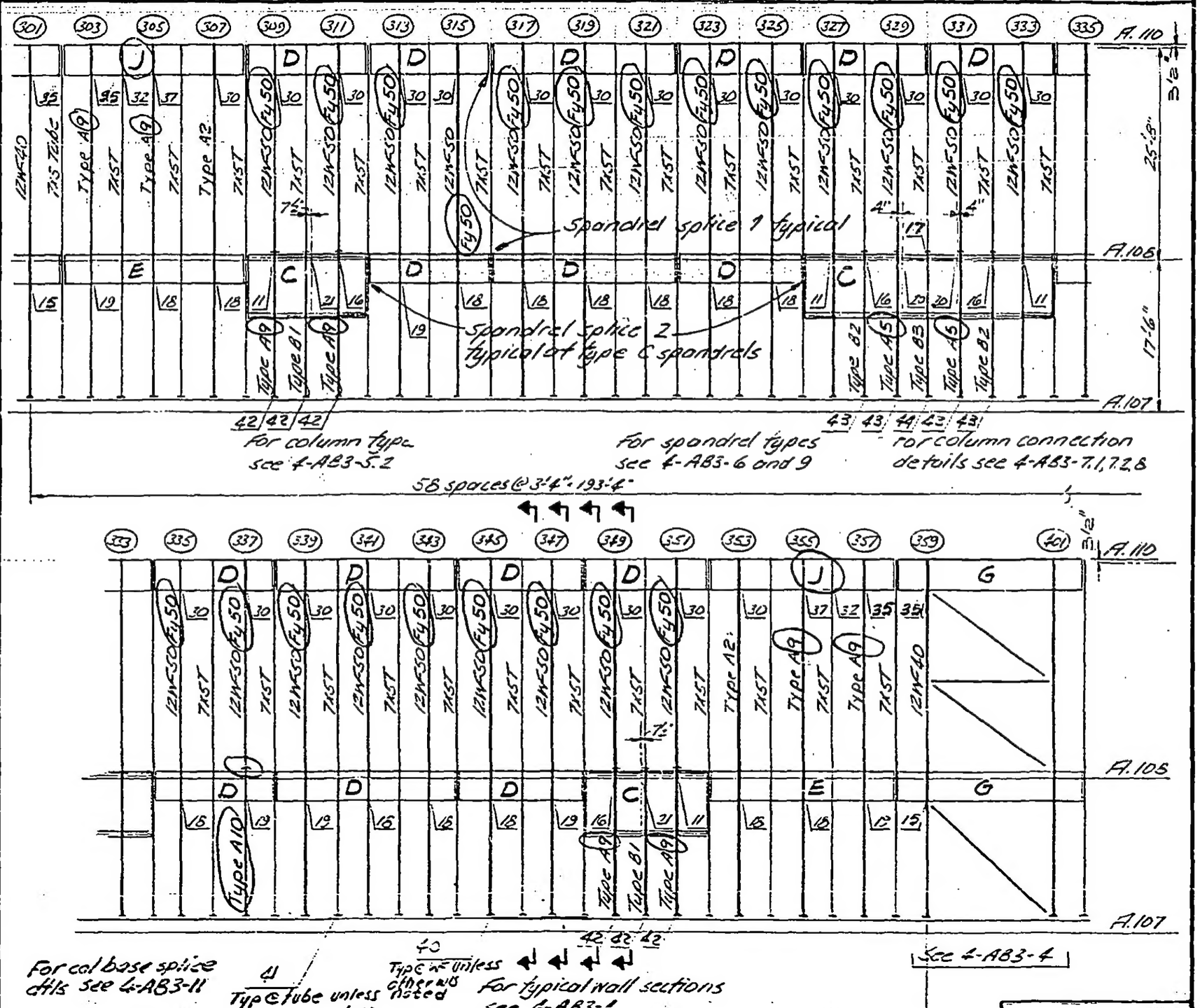

DESIGNED
DRAWN J.A
REVIEWED

SKILLING, HELLE, CHRISTIANSEN, ROBERTSON — Structural & Civil Engineers

PROJECT: THE WORLD TRADE CENTER

TITLE: EXT. WALL - 107 TO 110 - COL. & SPANDREL SCH. - TOWER B

DATE: 9-2-69

REVISIONS

10-23-69

12-15-69
Conn dtls added

2-26-70

5-16-70

8-3-70

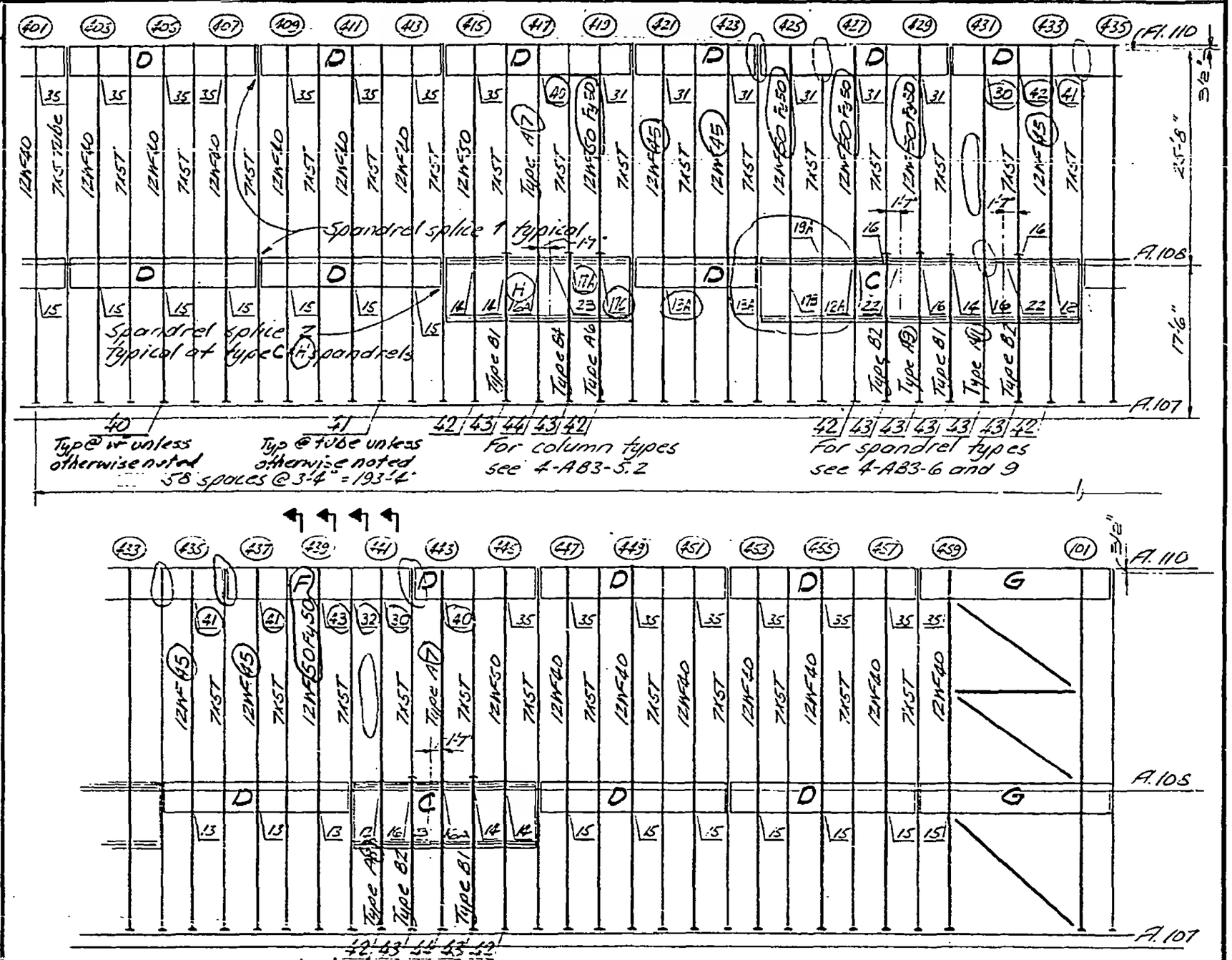

For col base splice dtls see 4-AB3-11

For typical wall sections see 4-AB3-4

For column connection details see 4-AB3-7.1,7.2,8

See 4-AB3-4

DESIGNED V.F.

DRAWN V.F.

REVIEWED

SKILLING, HELLE, CHRISTIANSEN, ROBERTSON — Structural & Civil Engineers

PROJECT: THE WORLD TRADE CENTER | TITLE: EXTERIOR WALL -107 TO 110- SPANDREL SPLICES | DATE: 8-15-69

REVISIONS

12-15-69

2-26-70

3-16-70

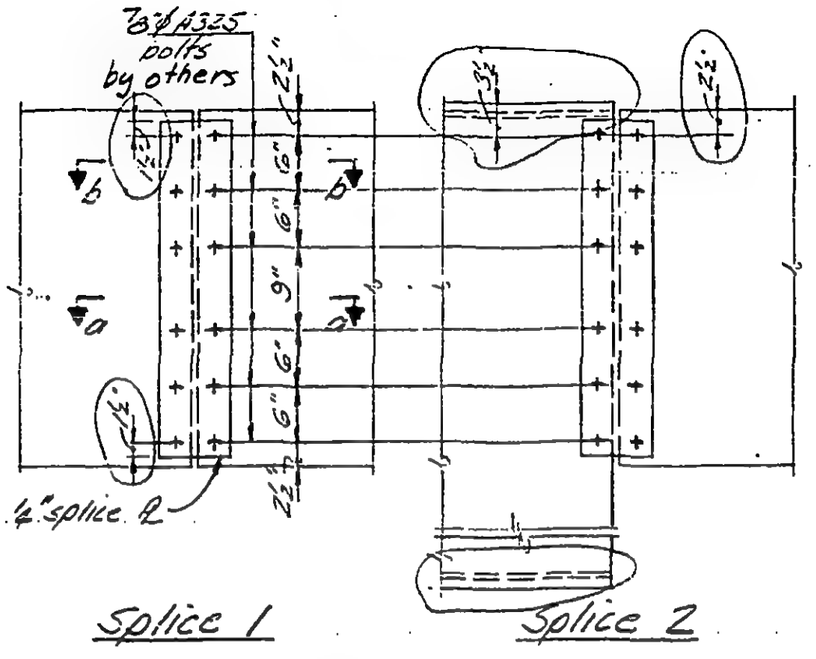

Splice 1

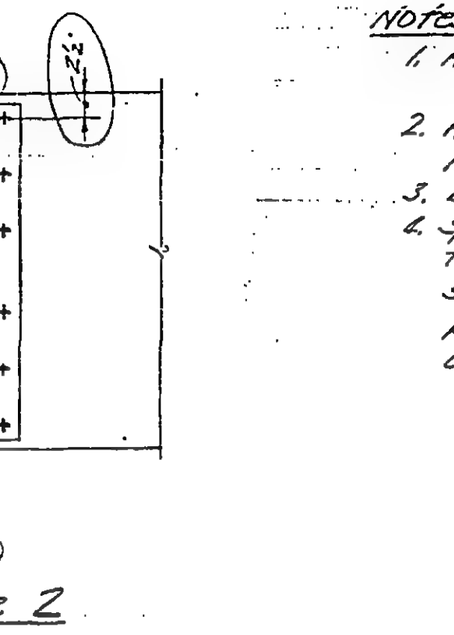

Splice 2

NOTES:

1. Holes in spandrel plates to be 1 1/16" ϕ
2. Holes in splice plates 1/16" larger than bolt diameter.
3. Bolt heads on outside face.
4. Splice plates to be shipped attached to spandrel plates with 2 shipping bolts and shall not project beyond end of spandrel during shipping.

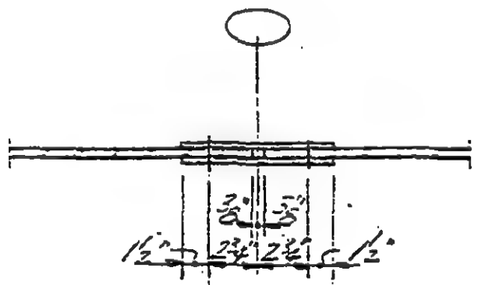

Section a-a

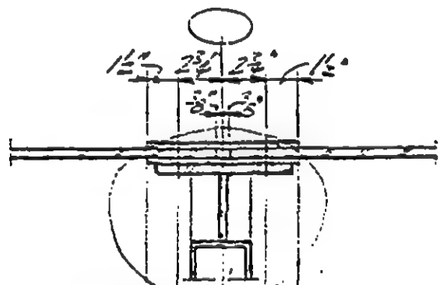

Section b-b

Where spandrels some thickness.

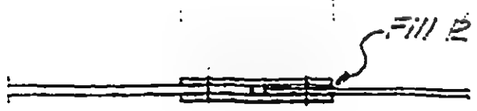

Section a-a

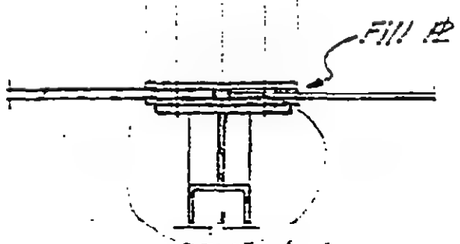

Section b-b

Where spandrel thickness varies.

L-AR7-2

WORTHINGTON, SKILLING, HELLE & JACKSON — Civil & Structural Engineers

PROJECT: THE WORLD TRADE CENTER | TITLE: EXTERIOR WALL - 107 TO 110 - TYPICAL ELEVATION | DATE: 6-5-67

REVISIONS

8/15/69
12-15-69
2-26-70
3-16-70

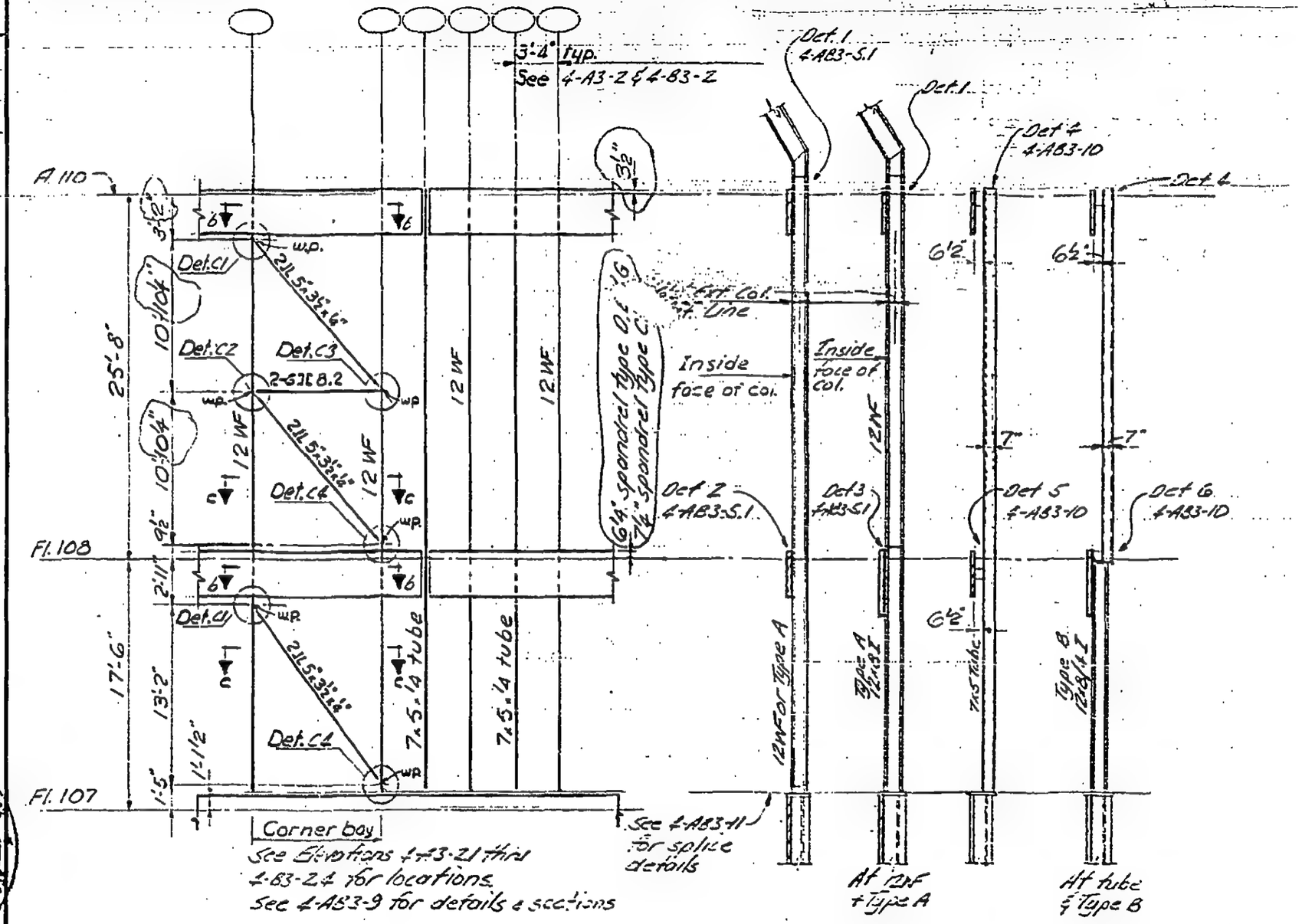

Part elevation of ext. wall

Sections through ext. wall

LICENSED PROFESSIONAL ENGINEER — LESLIE E. ROBERTSON — No. 34360 — UNIVERSITY OF THE STATE OF NEW YORK

4-AB3-4

SKILLING, HELLE, CHRISTIANSEN, ROBERTSON — Structural & Civil Engineers

PROJECT: THE WORLD TRADE CENTER | TITLE: EXTERIOR WALL -107 TO 110 - COLUMN DETAILS | DATE: 4-12-67

REVISIONS
8-15-69
12-15-69
2-26-70
3-16-70
8-3-70

DESIGNED J.H.
DRAWN J.R.

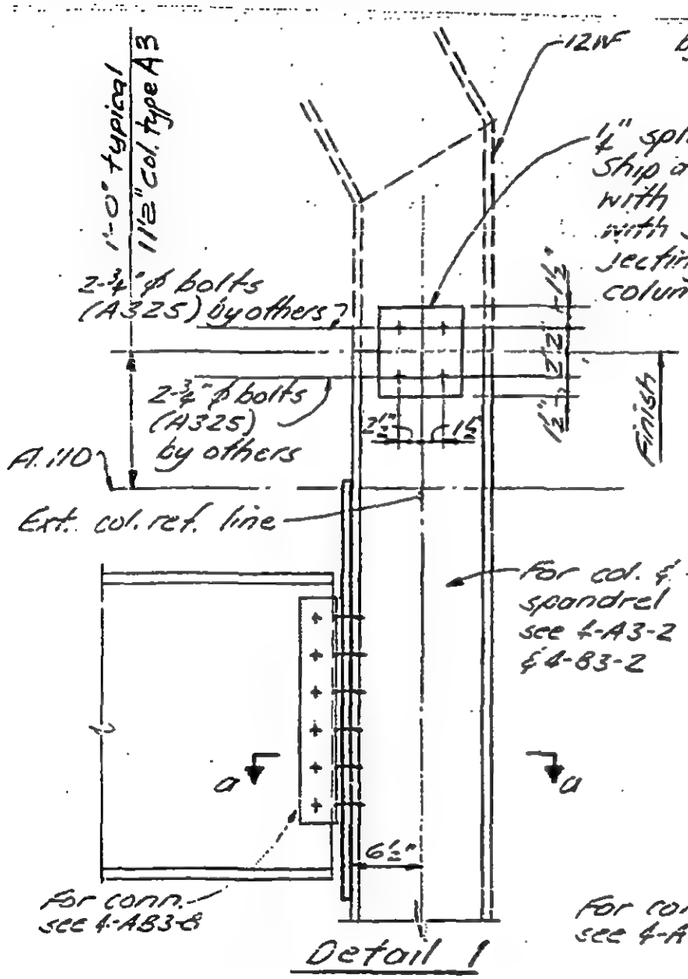

Detail 1

Detail 2

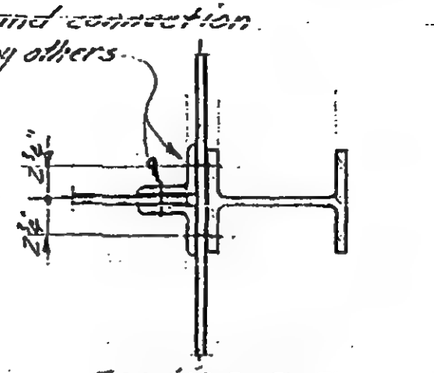

Section a-a at typical WF Column

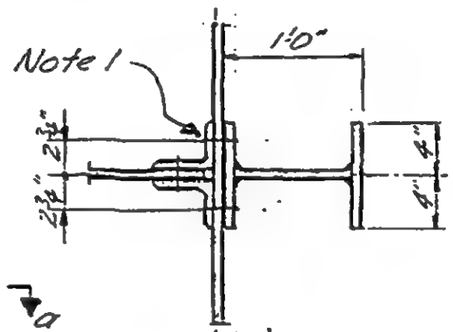

Section a-a of Column Type A1, A2, A4, A5, A6, A8, A9, A10 & A11

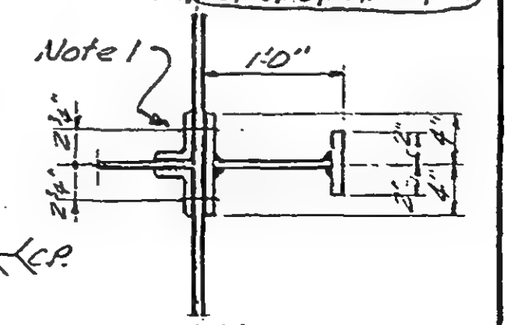

Section a-a of Column Type B1 B2 B3 B4 B5 Floor 108 only

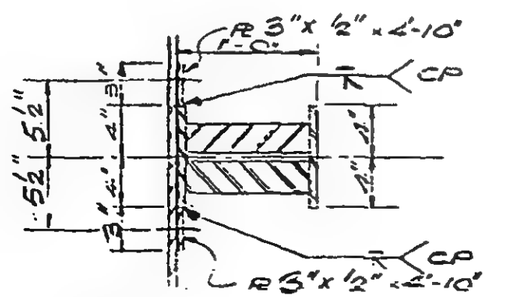

Section a-a @ Col A3 & A7

See Dwg. 4-A55-4 for locations of details.

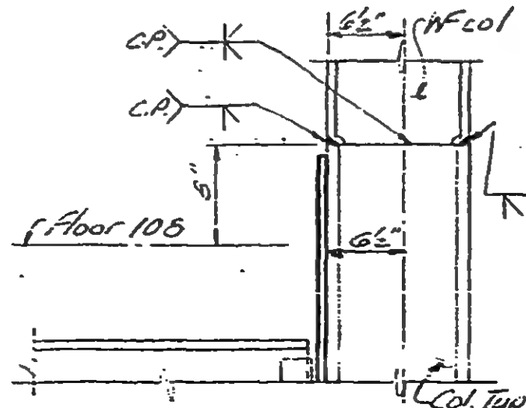

Detail 3

Col. Type A1, A2 & A4

SKILLING, HELLE, CHRISTIANSEN, ROBERTSON — Structural & Civil Engineers

PROJECT: THE WORLD TRADE CENTER | TITLE: EXTERIOR WALL-107 TO 110 - COLUMN TYPES | DATE: 8/15/69

REVISIONS
12-15-69
3-16-70
4-10-70
8-3-70R

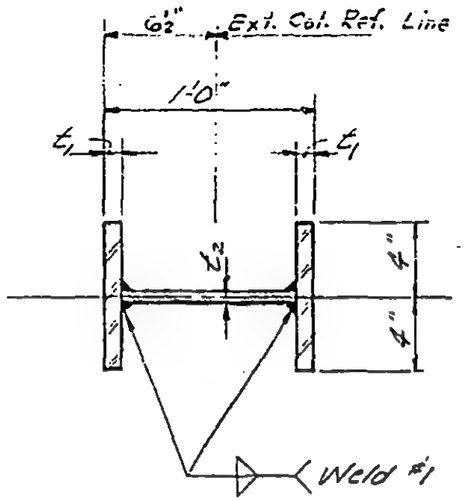

A1, A2 & A4 thru A11

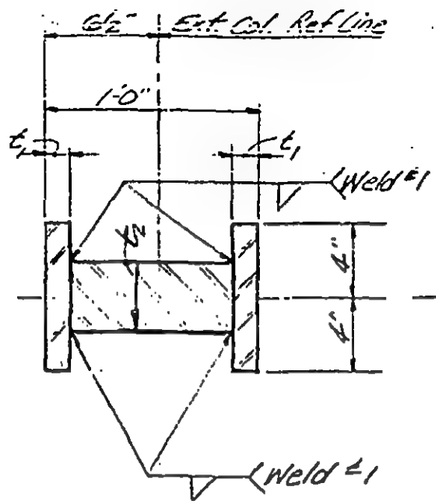

A3 & A7

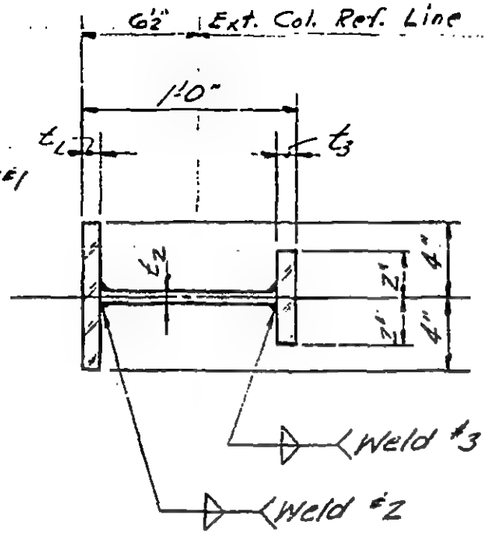

B1 thru B4

Schedule Col. Type A

Tower	Mark	t_1	t_2	Weld #1	Fy
A&B	A1	1	1/2	5/16	42
A&B	A2	1½	¾	⅜	42
A	A3	1½	3½	½	50
A	A4	1	¾	5/16	42
B	A5	1¼	¾	5/16	42
B	A6	1¾	¾	⅜	42
B	A7	1¾	¾	½	50
B	A8	2	¾	⅜	42
B	A9	1¼	½	5/16	42
B	A10	1¼	⅜	5/16	42
B	A11	1½	½	⅜	42

Column Type A

Schedule Column Type B

Tower	Mark	t_1	t_2	t_3	Fy	Weld #2	Weld #3
A&B	B1	1	½	1	42	5/16	5/16
A&B	B2	1½	¾	1½	42	⅜	⅜
A&B	B3	1½	¾	1½	50	⅜	⅜
B	B4	1¾	¾	1¾	50	⅜	⅜

Column Type B

See Dwgs 4-A3-2.1 thru 4-A3-2.4 and 4-B3-2.1 thru 4-B3-2.4 for locations.
See Dwg 4-AB3-1 for Index & Gen Notes.

DESIGNED J.H
DRAWN J.O.

4-AB3-S7

SKILLING, HELLE, CHRISTIANSEN, ROBERTSON — Structural & Civil Engineers

PROJECT: THE WORLD TRADE CENTER | TITLE: EXTERIOR WALL -107 TO 110 - SPANDREL TYPES | DATE: 4-12-67

REVISIONS

8/15/69
12/15/69
3/16/70
4/10/70
8/3/70

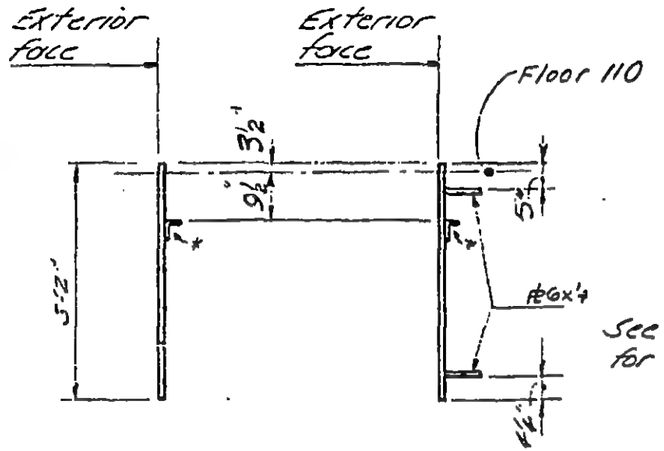

Types D, F & J

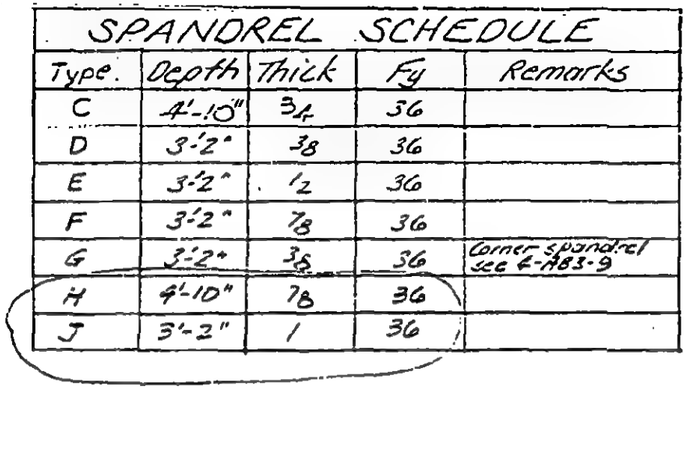

Type G

SPANDREL SCHEDULE

Type	Depth	Thick	Fy	Remarks
C	4'-10"	3/4	36	
D	3'-2"	3/8	36	
E	3'-2"	1/2	36	
F	3'-2"	7/8	36	
G	3'-2"	3/8	36	Corner spandrel see 4-A83-9
H	4'-10"	7/8	36	
J	3'-2"	1	36	

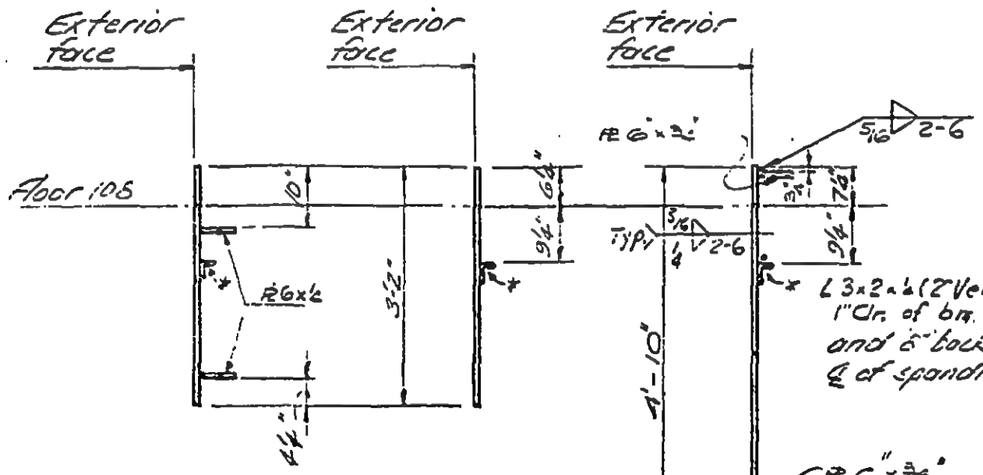

Type G

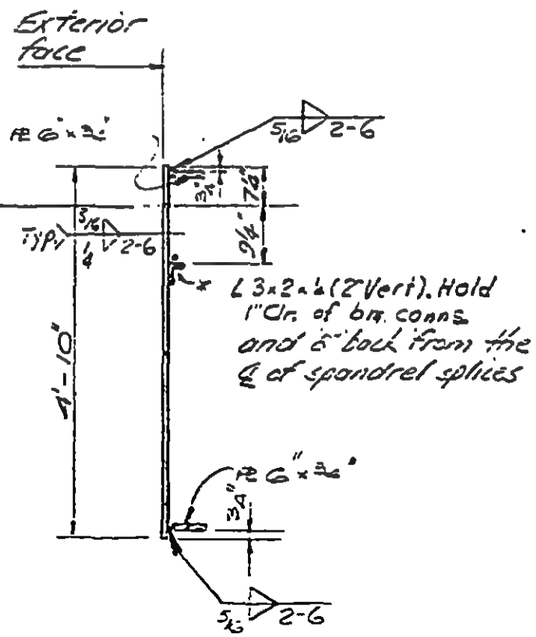

Types D & E

Type C & H

SKILLING, HELLE, CHRISTIANSEN, ROBERTSON — Structural & Civil Engineers

PROJECT THE WORLD TRADE CENTER | TITLE EXTERIOR WALL CONNECTIONS - FLOOR 108 | DATE 4.12.67

REVISIONS

12-15-69
2-26-70
3-16-70
4-27-70
8-3-70

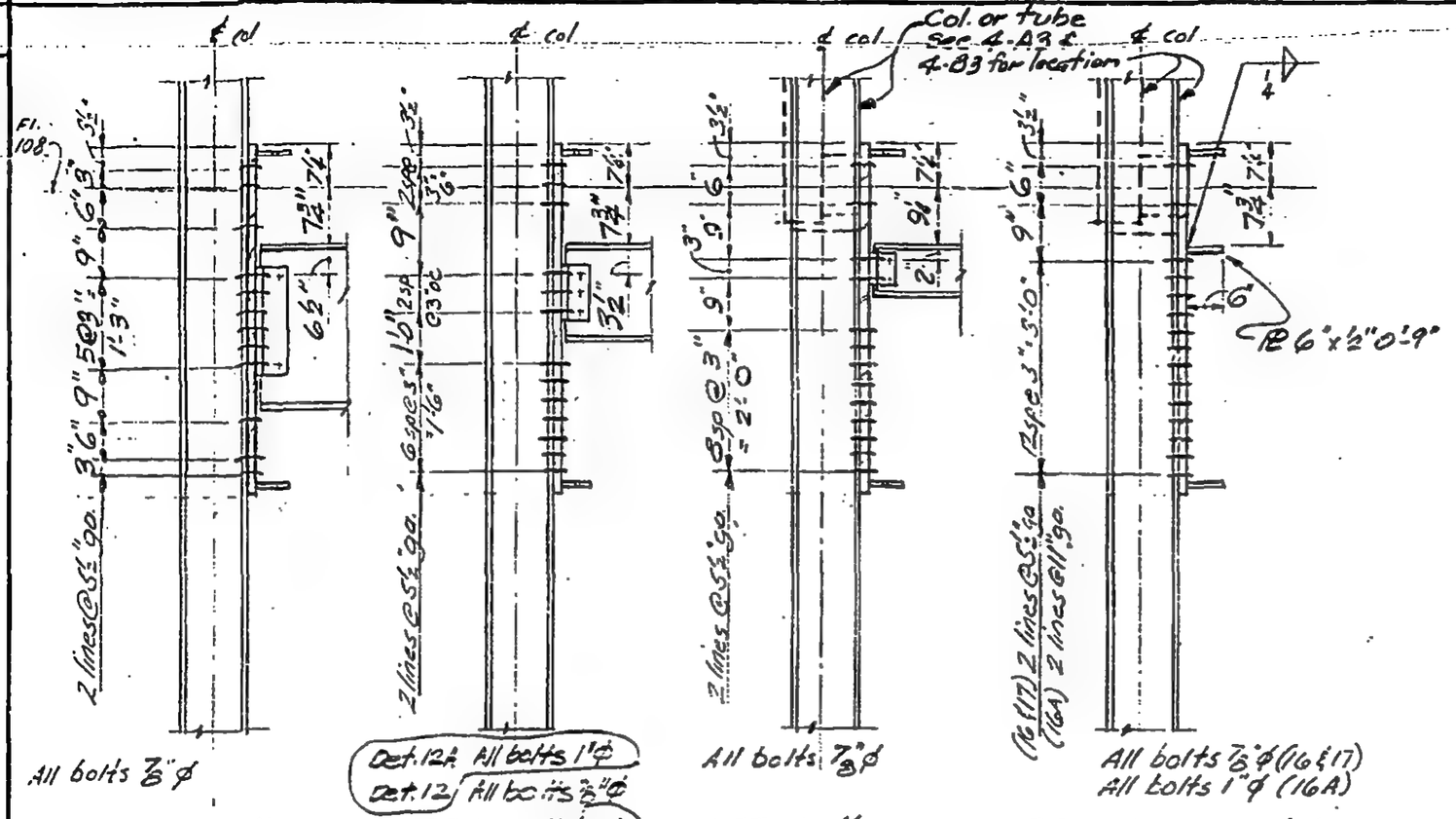

DETAIL 11 | DETAIL 12 & 12A | DETAIL 14 | DETAILS 16, 16A & 17

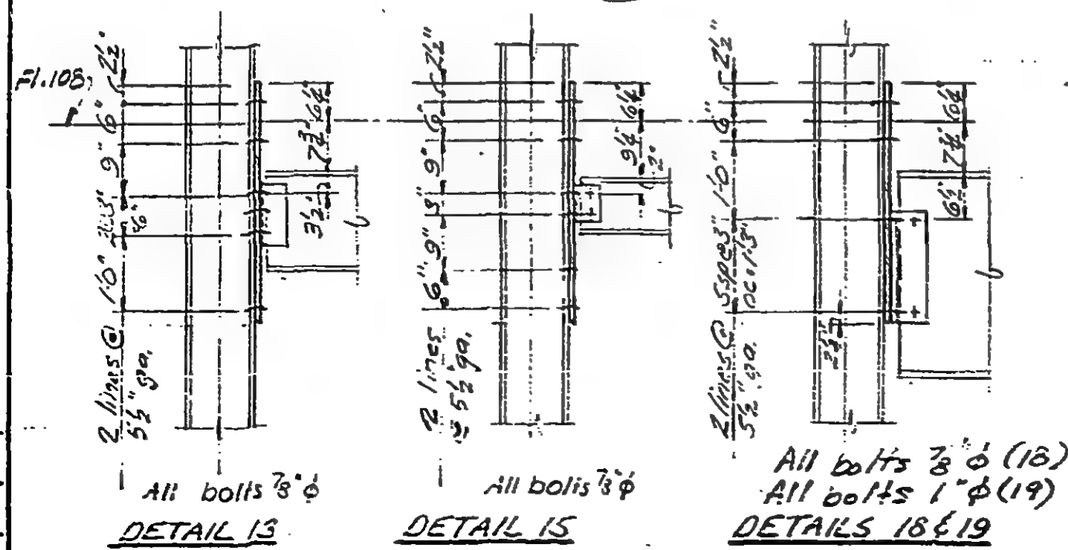

DETAIL 13 | DETAIL 15 | DETAILS 18 & 19

Notes:

1. Bolts, connection angles and beams by others.
2. All holes in spandrels to be 1/16" ϕ. All holes in column connection angles and beams to be 1/16" larger than bolt diameter.
3. All bolts A325 or A490. See Drawing Book 9.

DESIGNED CHB
DRAWN MHB
REVIEWED

4-AB3-7.1

SKILLING, HELLE, CHRISTIANSEN, ROBERTSON — Structural & Civil Engineers

PROJECT: THE WORLD TRADE CENTER | TITLE: EXTERIOR WALL CONNECTIONS - FLOOR 108 | DATE:

REVISIONS

2-26-70
3-16-70
4-27-70

-All bolts 1" ø unless otherwise noted.
-See Notes on 4-AB3-7.1

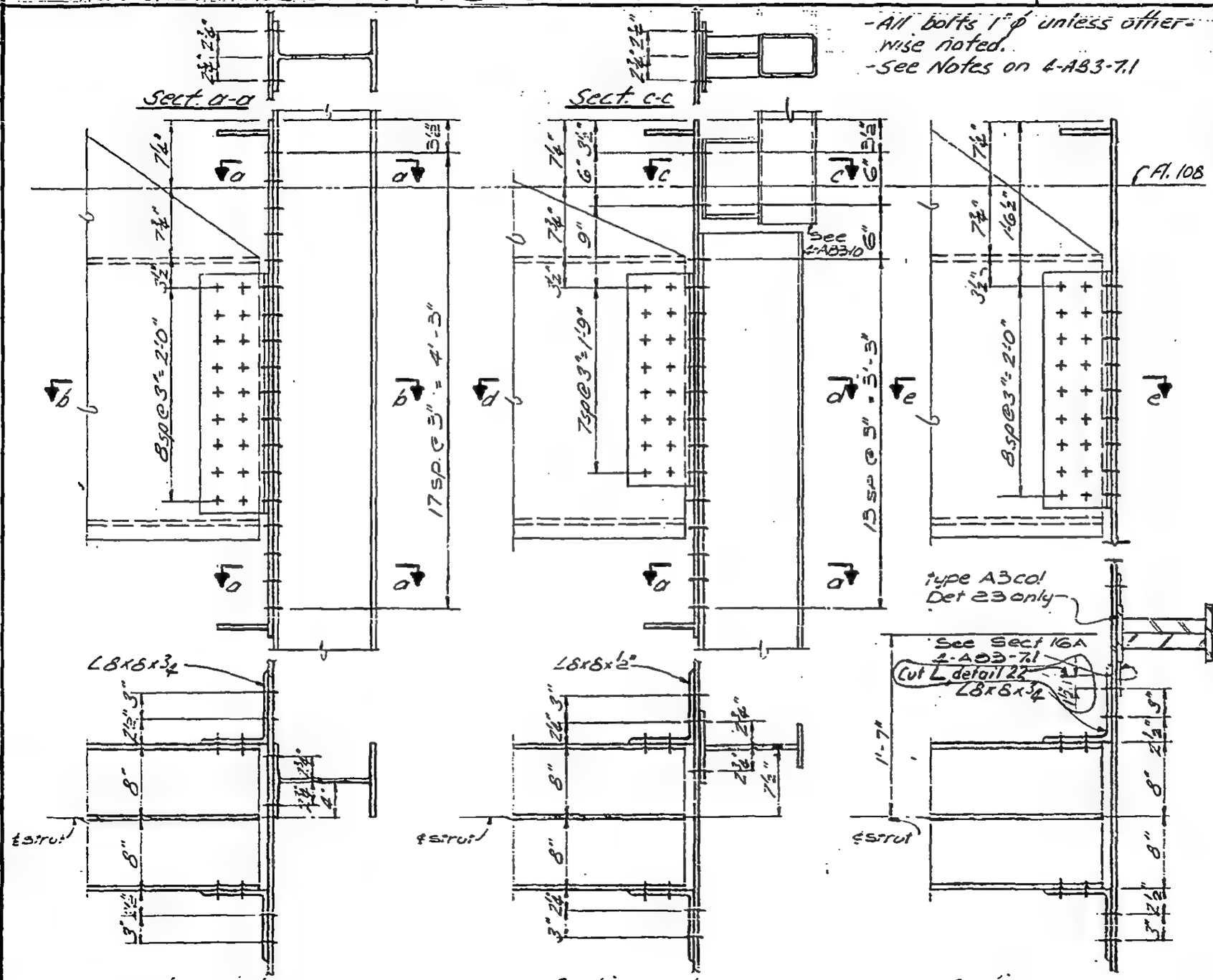

Section b-b
Detail 20

Section d-d
Detail 21

Section e-e
Detail 22 & 23

4-AB3-7.2

LESLIE E. ROBERTSON — LICENSED PROFESSIONAL ENGINEER — No. 34360 — UNIVERSITY OF THE STATE OF NEW YORK

DESIGNED

DRAWN

SKILLING, HELLE, CHRISTIANSEN, ROBERTSON — Structural & Civil Engineers

PROJECT: THE WORLD TRADE CENTER | TITLE: EXTERIOR WALL CONNECTIONS: FLOOR 108 | DATE: 8-3-70

REVISIONS

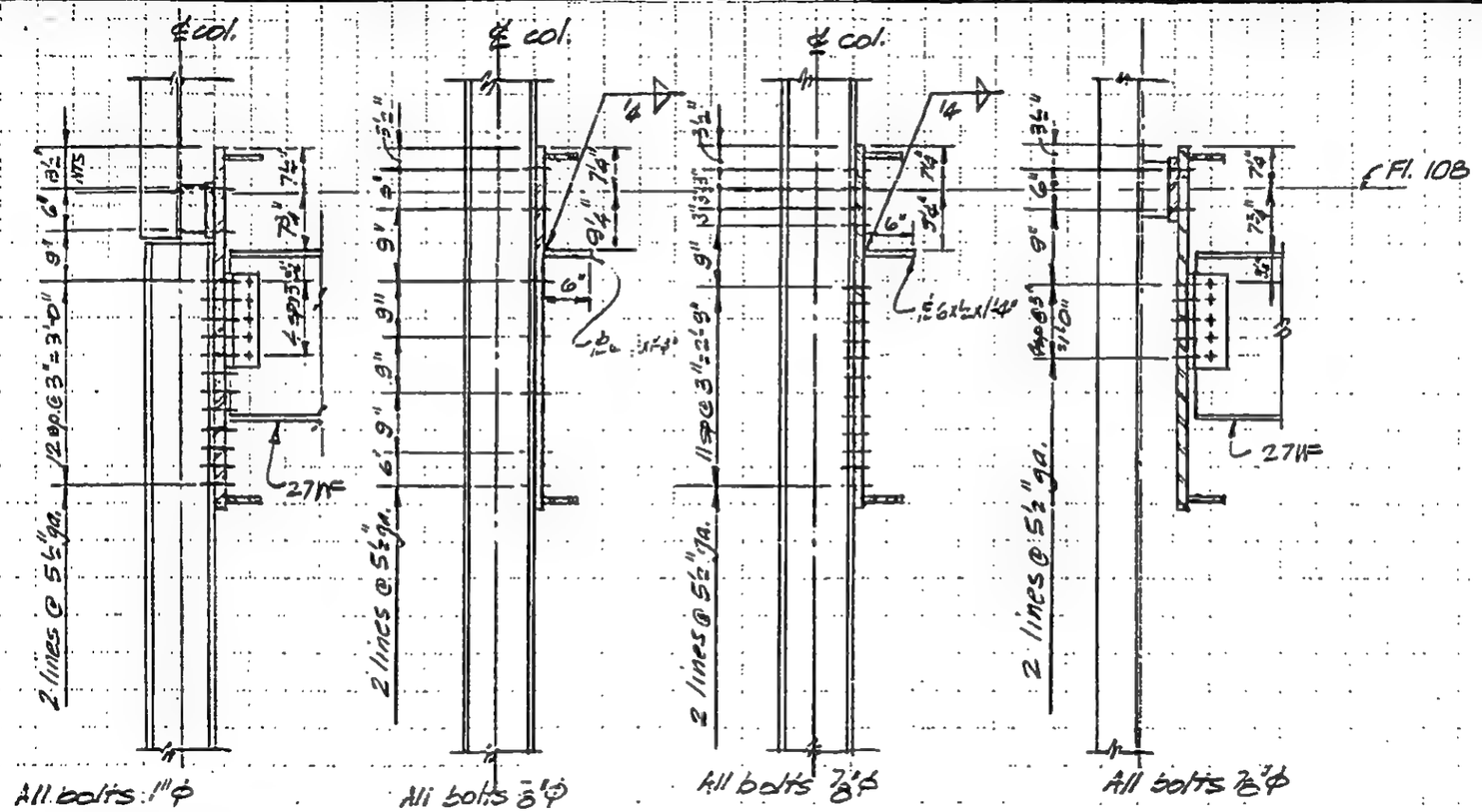

DETAIL 17A | DETAIL 17B | DETAIL 17C | DETAIL 19A

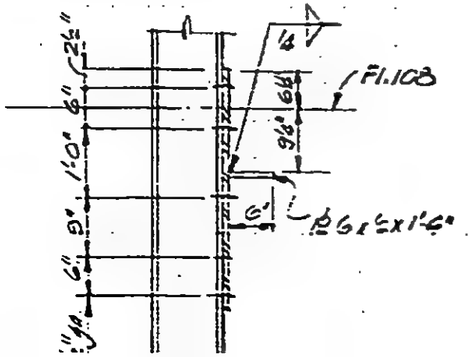

Notes:

1. Bolts, connection angles and beams by others.
2. All holes in spandrels to be 1 1/16" ϕ. All holes in column connection angles and beams to be 1/16" larger than bolt diameter.
3. All bolts A325 or A490, see Drawing Book 9.

LICENSED PROFESSIONAL ENGINEER — LESLIE E. ROBERTSON — NEW YORK

SKILLING, HELLE, CHRISTIANSEN, ROBERTSON — Structural & Civil Engineers

PROJECT THE WORLD TRADE CENTER | TITLE EXTERIOR WALL CONNECTIONS - FLOOR 110 | DATE 4-12-67

REVISIONS

12/15/69
2-26-70
3-16-70
8-3-70

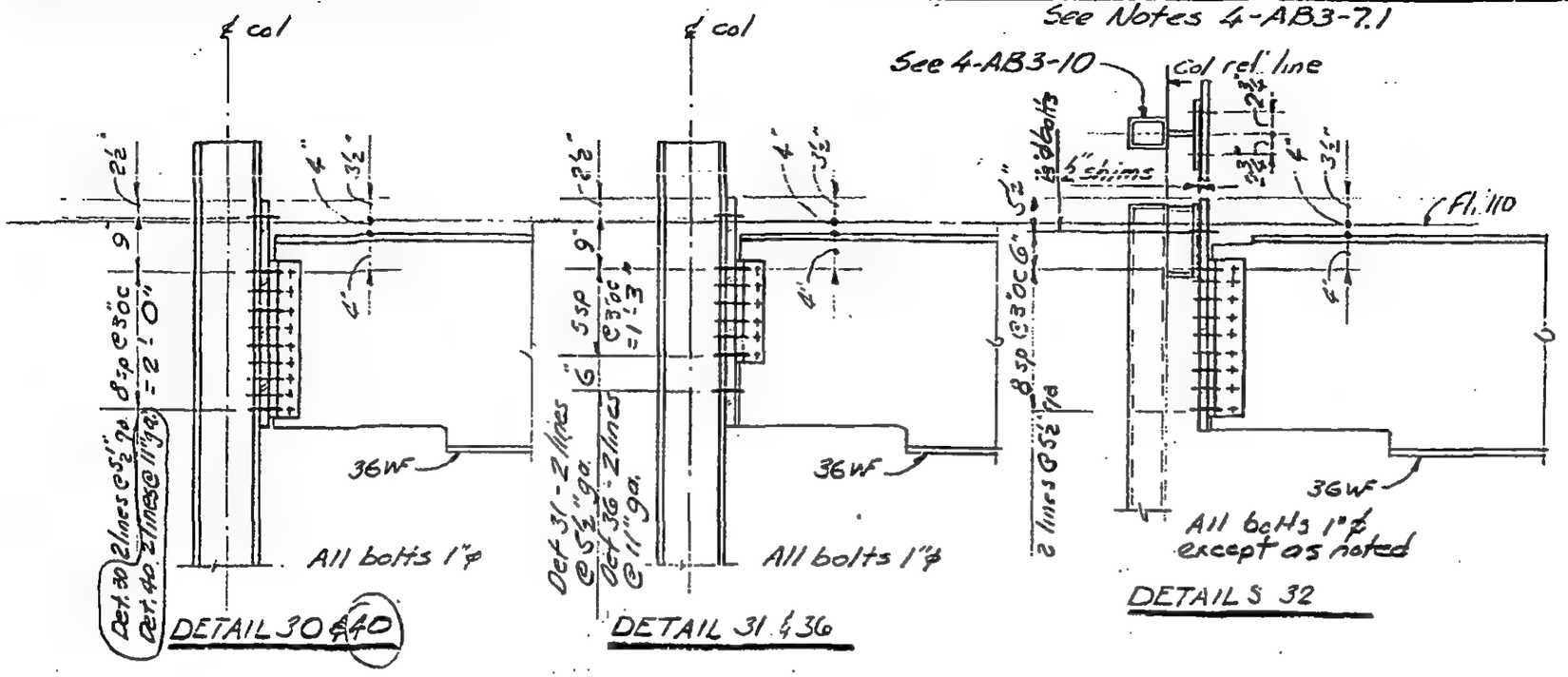

DETAIL 30 & 40

DETAIL 31 & 36

DETAIL S 32

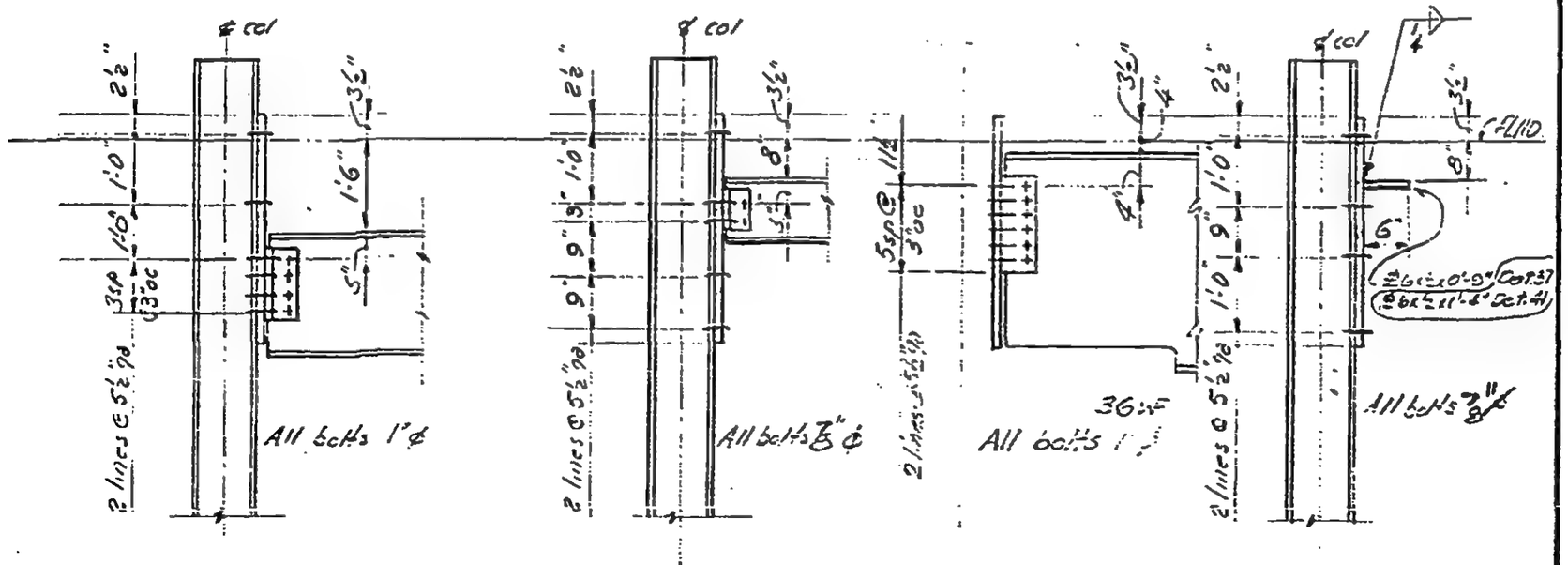

DETAIL 34

DETAIL 35

DETAIL 36

DETAIL 37 & 41

DESIGNED IRB
DRAWN IRB
REVIEWED

SKILLING, HELLE, CHRISTIANSEN, ROBERTSON — Structural & Civil Engineers

PROJECT THE WORLD TRADE CENTER | TITLE EXTERIOR WALL CONNECTIONS - FLOOR 110 | DATE 8-3-70

REVISIONS

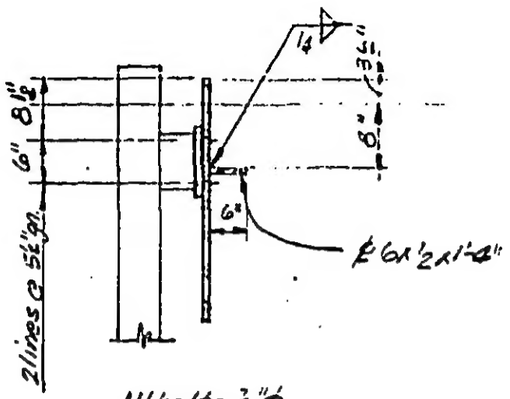

All bolts ⅞"Φ

DETAIL 42

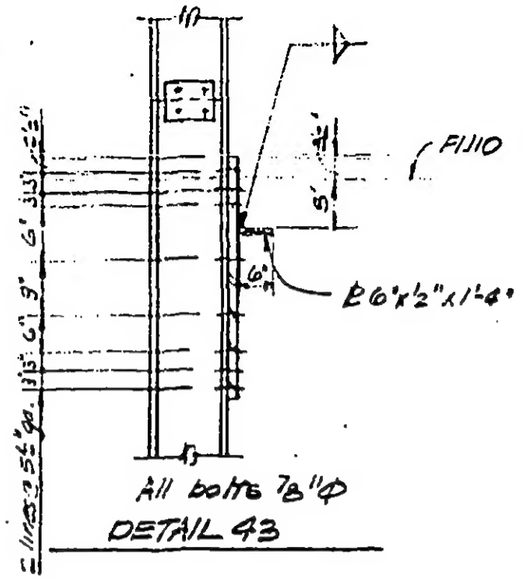

All bolts ⅞"Φ

DETAIL 43

LICENSED PROFESSIONAL ENGINEER
LESLIE E. ROBERTSON
No 34300
UNIVERSITY OF THE STATE OF NEW YORK

CHKD

DRAWN P. Ciccini

REVIEWED

4-A53-8.2

WORTHINGTON, SKILLING, HELLE & JACKSON — Civil & Structural Engineers

PROJECT THE WORLD TRADE CENTER | TITLE EXTERIOR WALL - 107 to 110 - CORNER DETAILS | DATE 4-12-67

REVISIONS

8-15-69
12-15-69
2-26-70
4-10-70

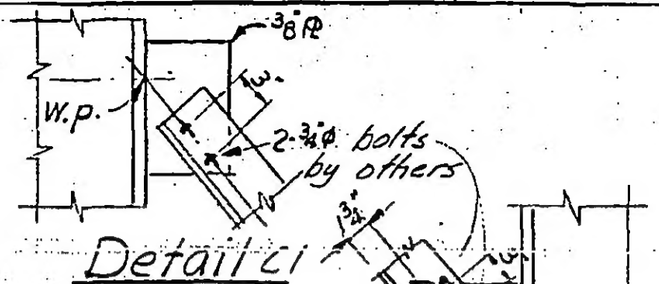

Detail C1

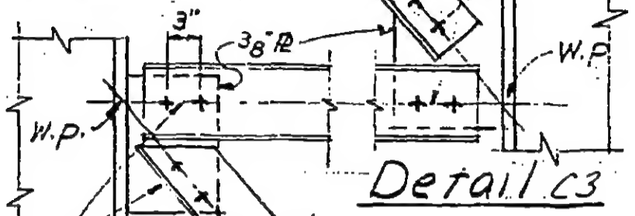

Detail C3

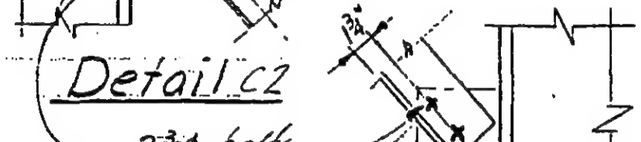

Detail C2

2-3/4" bolts by others

Detail C4

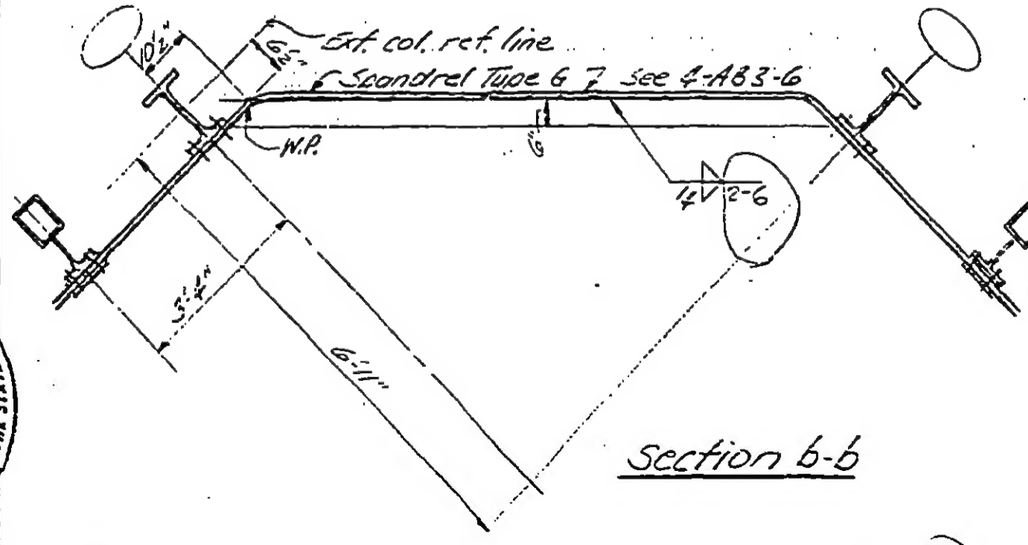

Section b-b

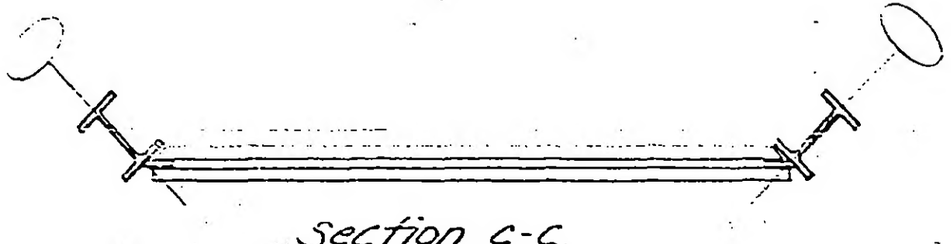

Section c-c

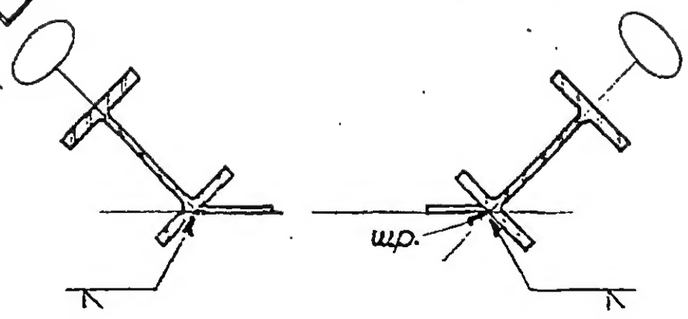

PLAN OF GUSSET PL AT COLS.

See dwg 4-AB3-4 for typical Elevation and member sizes & dtl. locations

4-AB3-9

LESLIE E. ROBERTSON — LICENSED PROFESSIONAL ENGINEER — NEW YORK No. 036436 — NEW YORK ILLUSTRATION

SKILLING, HELLE, CHRISTIANSEN, ROBERTSON — Structural & Civil Engineers

PROJECT: THE WORLD TRADE CENTER | TITLE: EXTERIOR WALL -107 TO 110 - TUBE DETAILS | DATE: 4-12-67

REVISIONS

8/15/69
12/15/69
2-26-70
3-16-70
4-27-70

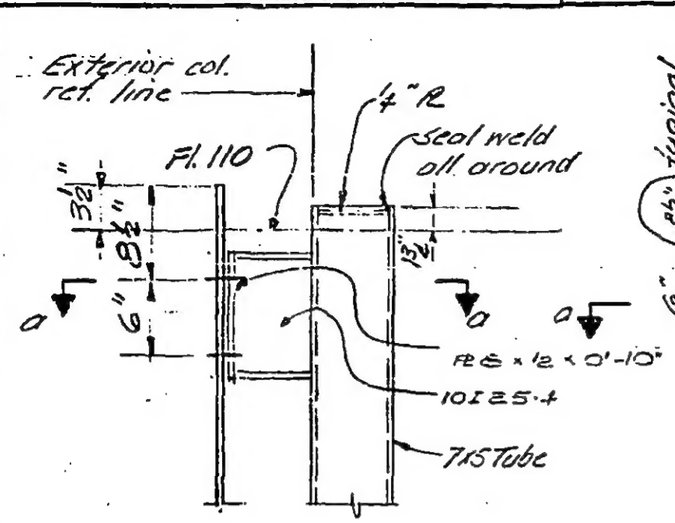

Detail 4

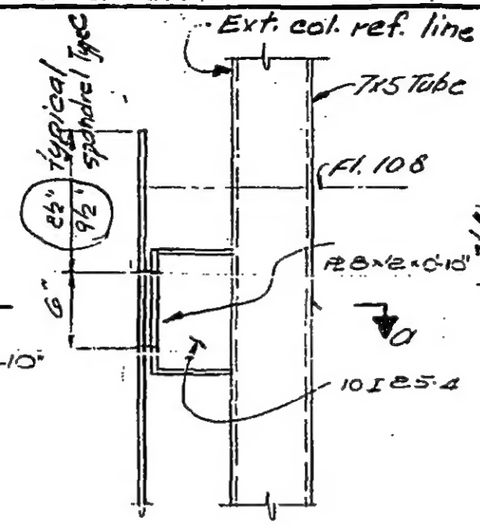

Detail 5

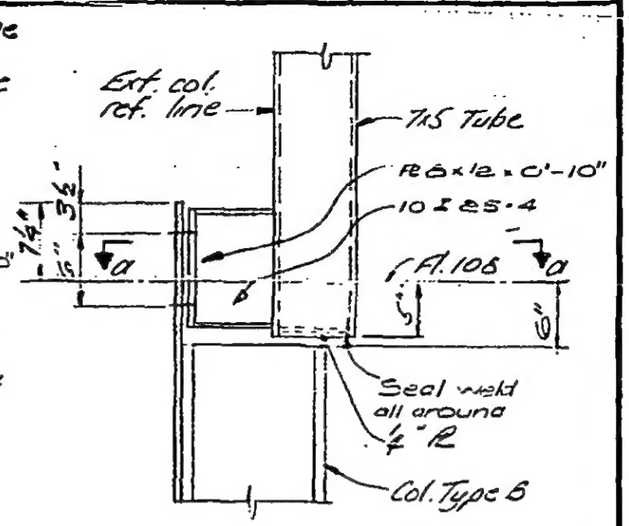

Detail 6

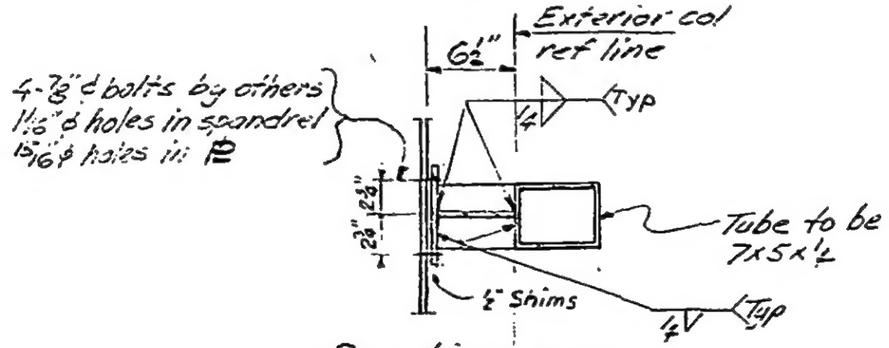

Section a-a

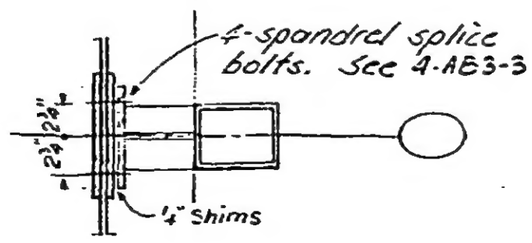

Section a-a
of Spandrel Splice

DESIGNED J.H
DRAWN J.I

SKILLING, HELLE, CHRISTIANSEN, ROBERTSON — Structural & Civil Engineers

PROJECT: THE WORLD TRADE CENTER | TITLE: EXTERIOR WALL SPLICE DETAIL - FLOOR 107 | DATE: 12-15-69

REVISIONS

2-26-70
3-16-70
8-3-70R

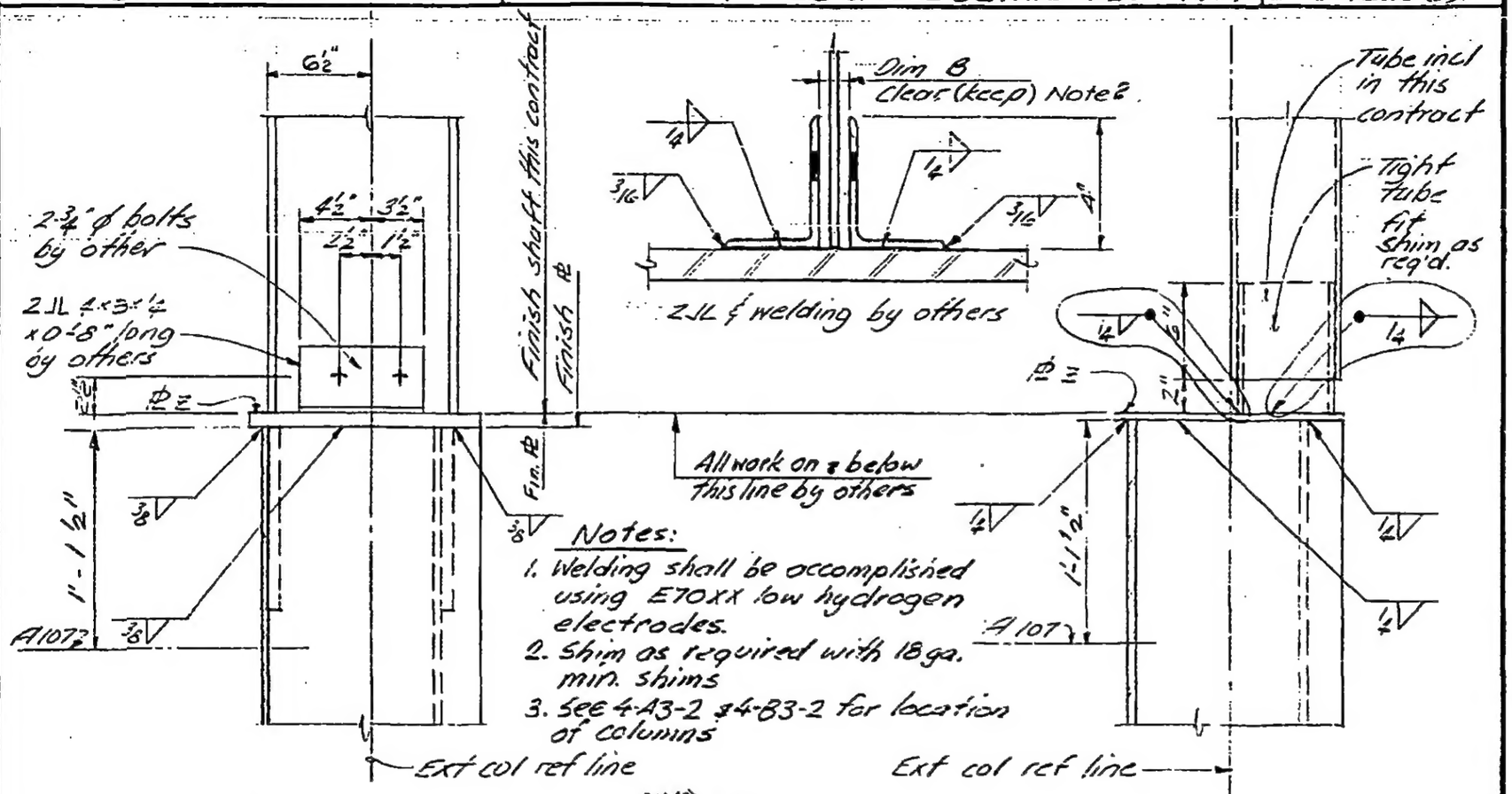

Detail 40 C WF & Type A & B

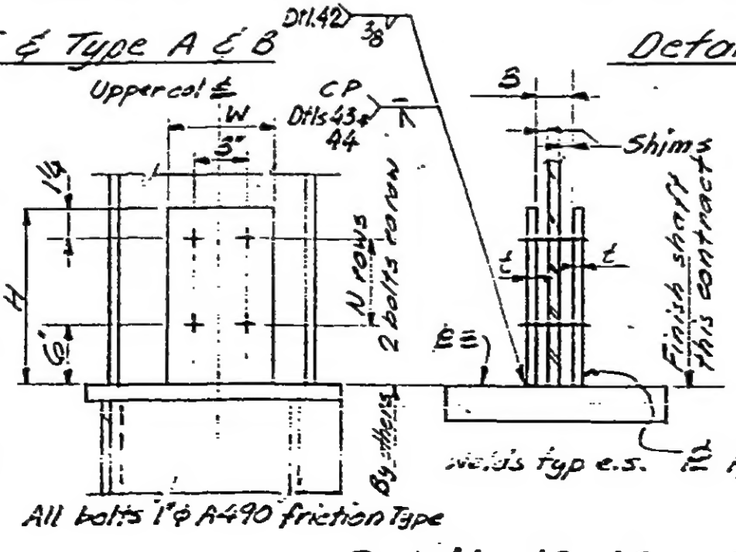

Col. Type	Dim. B	℄ to E
Type A1 (A2 & A11)	5"	1"
Type A2 (A5 & A9)	3"	1½"
Type A3 & (A7)	4"	1½"
Type A4 (A8 & A12)	15"	1"
(Type A10)	12"	1"
Type B1	5"	1"
Type B2, B3 (& B4)	3"	1½"
T.S. Tube	—	2"
W.F. 45-50	12"	1"

Detail 41 C 7x5 Tube

Dtl No	N rows	Tot. No bolts	W	H	t
42	1	2	8	7¼	3/8
43	2	4	8	13"	5/8
44	3	6	5¾	1'-4"	1¼

DESIGNED J.H
DRAWN J.H
REVIEWED